PURATI

Product Coded
FMA-B4152D-D

# Fuoco Mini Adjustable CNC, Black, 2700K, 15°, DALI

https://purati.com/product/fuocominiadjustablecnc/



## DESCRIPTION

Classic, Minimalist and long-lasting durability
A simple and minimal LED architectural downlight with its deep recessed design providing a low glare with UGR<10 for residential, commercial and architectural applications.
Part of the Fuoco Collection

## QUICKINFO

### GENERAL

| | |
|---|---|
| Finish | Powder Coated - Black |
| Material | Aluminium |
| IP | 44 |
| Lifespan | >50,000h L80 |
| Warranty | 5 years |

### LED

| | |
|---|---|
| Lumen | 318lm |
| Efficacy | 76lm |
| CCT | 2700K |
| CRI | >90 |
| SDCM | <2 |
| UGR | <10 |
| Beam Angles | 15° |

### ELECTRICAL

| | |
|---|---|
| Voltage | 220-240V |
| Power | 4W |
| Driver (Built-in) | DALI |

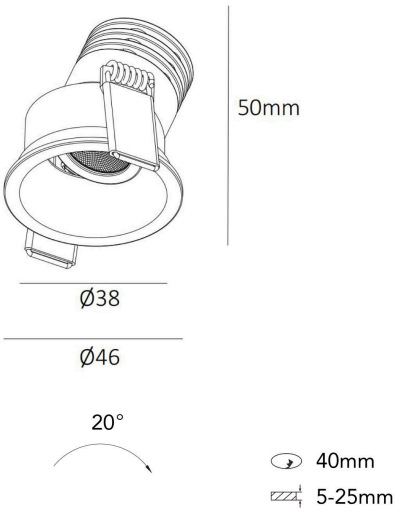


| | | | | |
|---|---|---|---|---|
| | CE | IP44 | CRI >90 | 5 years |

**PURATI PTY LTD**
Unit 10, 80 O'Riordan St, Alexandria NSW 2015
Tel: +61 2 8065 8181 sales@purati.com